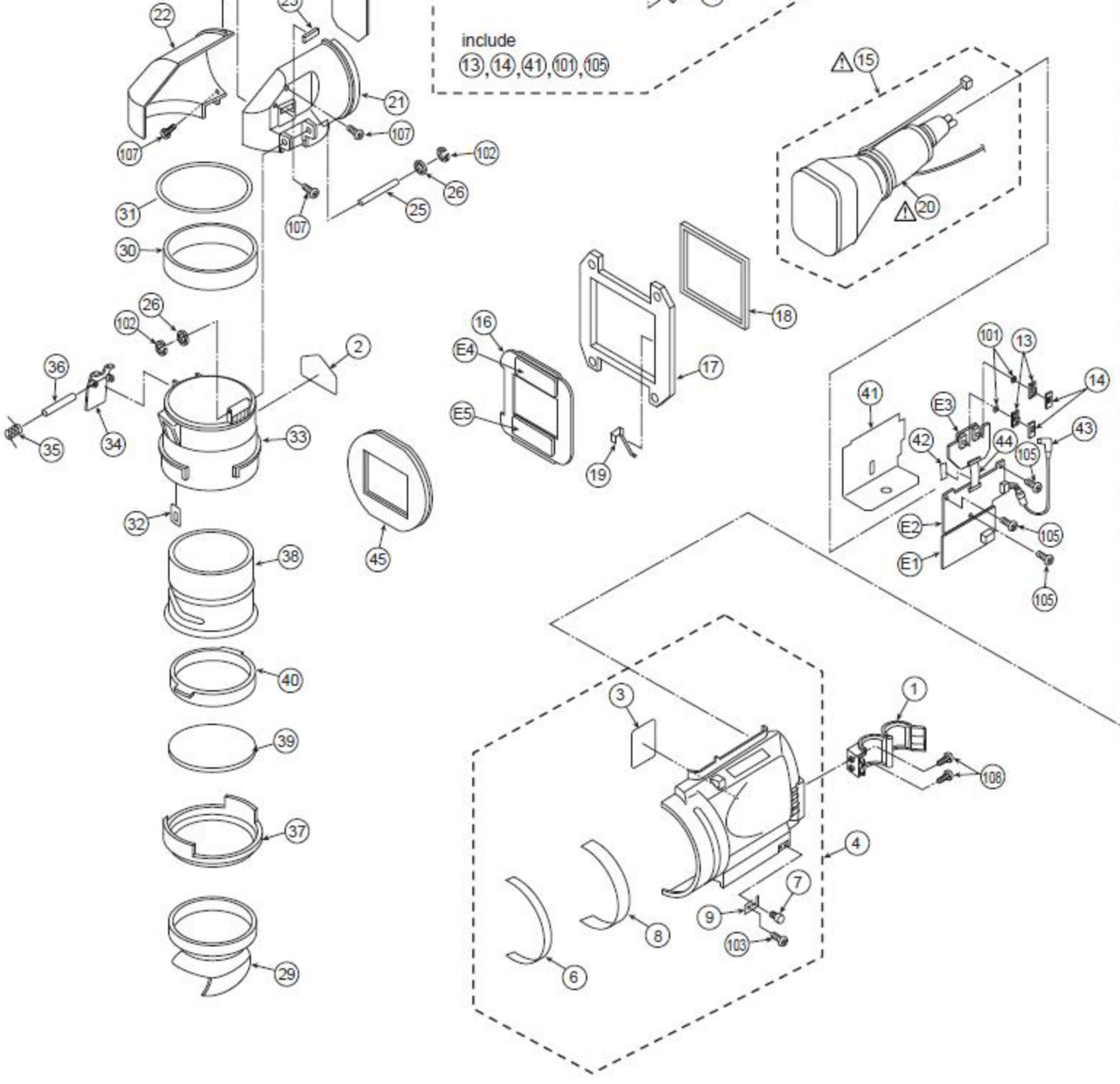
include
13,14,41,101,105
22
23
21
107
107
102
26
25
31
30
107
26
102
36
35
34
2
33
32
38
45
40
39
37
29
16
E4
E5
17
18
19
15
20
101
13
14
41
E3
42
44
43
105
E2
105
E1
105
3
1
108
4
7
9
103
8
6

VF PARTS ASSEMBLY

Components identified with the mark ⚠ have the special characteristics for safety.
When replacing any of these components, use only the same type.

Ref. No.	Part No.	Part Name & Description	Pcs	Remarks
1	VYC0936	MIC HOLDER U	1	
2	VQL1P71	CAUTION LABEL	1	
3	VQL1K49	HIGH VOLTAGE LABEL	1	
4	EVD601	TOP CASE U	1	
5	EV0102	BOTTOM CASE U	1	
6	VMX3152	SPACER SHEET (A)	2	
7	VHD1487	STOPPER SCREW	1	
8	VMC1513	PLATE SPRING (A)	2	
9	VMP7012	STOPPER PLATE	1	
10	VGH4524	FRONT SHEET	1	
11	VGF0902	BLIND SHEET	1	
12	VMP6993	P.C.B. HOLDER ANGLE (F)	1	
13	VGU7688	SLIDE SW COVER	2	
14	VMG1085	RAIN COVER RUBBER	2	
⚠ 15	EV7G01	CRT/DY CONNECTOR U	1	
16	VMD5727	MASK	1	
17	VMD5726	HIGH VOLTAGE BASE	1	
18	VMG1805	BASE PACKING	1	
19	VEE1D94	GND CON/EARTH PLATE CABLE	1	
⚠ 20	540067F	DEFLECTION YOKE	1	
21	VGP5615	CRT CASE (UPPER)	1	
22	VGP5616	CRT CASE (BOTTOM)	1	
23	VMG1410	RUBBER CUSHION	1	
24	VMC1741	PLATE SPRING (B)	1	
25	VMS7089	SHAFT	1	
26	VMX3153	SPACER	2	
27	VMT1274	P.C.BOARD CUSHION	1	
28	VDL1223	MIRROR	1	
29	VMG1414	EYE CAP	1	
30	VMX3242	SLIP RING	1	
31	VMG1221	LENS LOCK PACKING	1	
32	VMC1742	PLATE SPRING (C)	1	
33	VGP5617	EYEPEACE HOLDER	1	
34	VGU8954	LOCK KNOB	1	
35	VMB3567	SPRING	1	
36	VMS7075	SPRING PIN	1	
37	VGQ6366	MOUNT RING	1	
38	VDK0168	LENS HOLDER	1	
39	VDL1222	LENS	1	
40	VDS0162	LENS HOLDER RING	1	
41	VMZ3724	INSULATION SHEET	1	
42	VMZ3725	PROTECT TAPE	1	
43	VEE1C83	VF CABLE	1	
44	VWJ12H2056L0	FFC	1	
45	EVQ601	MASK CASE U		
101	XWGV3F6G	WASHER	2	
102	XUC15FP	E-RING	2	
103	XQN2+B25FJK	SCREW	1	
104	XQN2+BJ4FJK	SCREW	2	
105	XYN26+J5FJ	SCREW	5	
106	XSB26+10FJK	SCREW	4	
107	XTN26+8GFJK	SCREW	4	
108	XSB4+12FJK	SCREW	2	