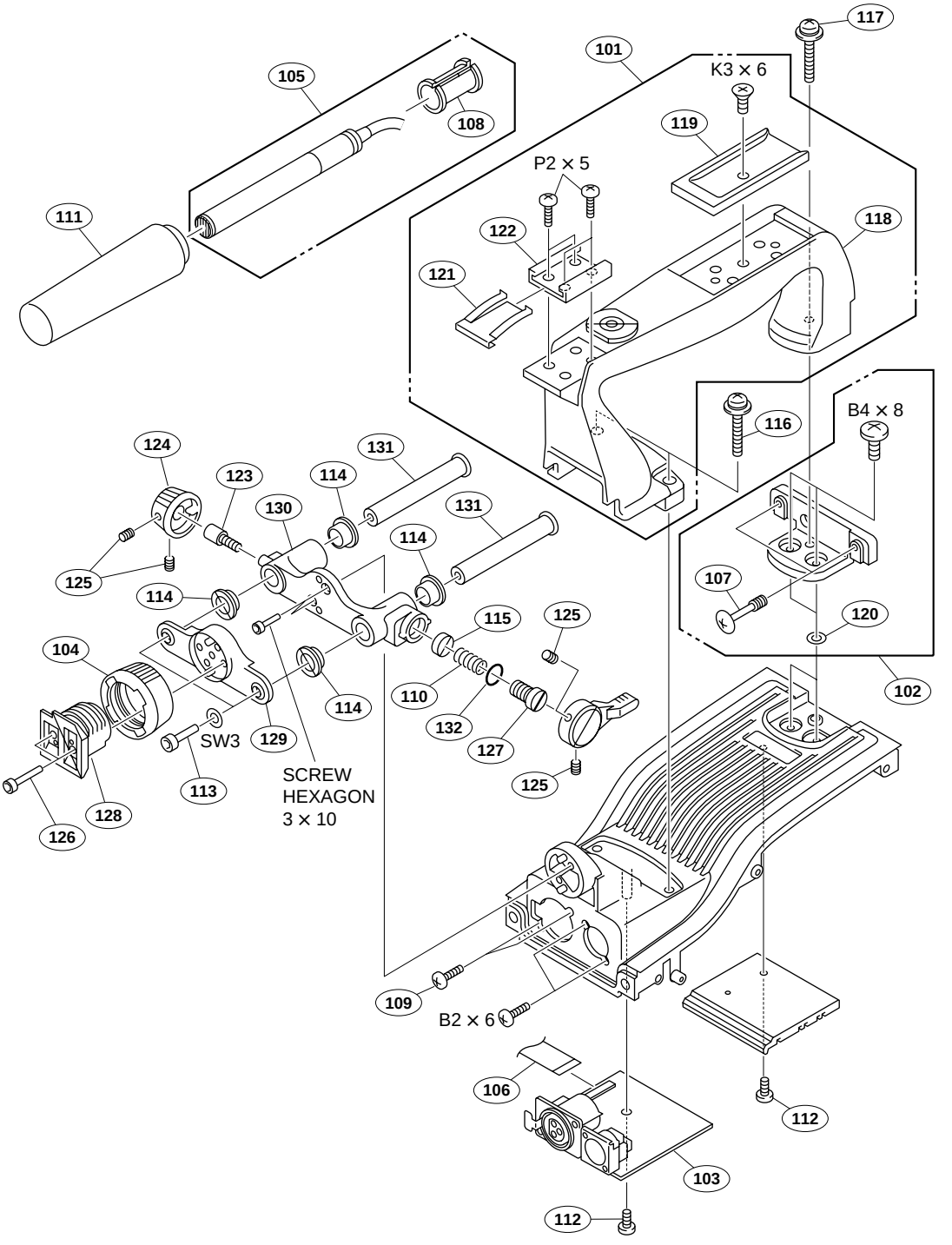Top Chassis Block