Libec LS-22DV

System	H22DV(Head) + T68(Tripod) + BR-1S(Mid-level spreader) + TC-60(Carrying case)		
Payload	4kg / 9lb	Tilt angle	+90° /-60°
Weight	3.9kg / 8.5lb	Pan angle	360°
Height	① H : 1470 mm W : 920 mm (※Reference)	Counterbalance	System :Off + 3position
	② H : 720 mm W : 635 mm (〃)		Selectable : Front heavy , Middle , Rear heavy
Folded length	③ L : 800 mm (〃)	Drag mode	FIX
Camera plate (Sliding range)	Quick release plate	Ball diameter	⌀75 mm
	---	Section	2STAGE (Material: Aluminum)
Plate attachment (Screw sliding range)	Type:1/4-20UNC screw with video pin	Tripod fixation	Fixing lock knob
	33 mm	Spreader	BR-1S (Telescopic, Removable)
Spare screw	No spare screw equipped	Pan handle	Unique pan handle (Non-telescopic)
	---	Case material	Nylon

Remarks

Outside diameter of pipe

Upper: ϕ16 / Middle: ϕ24 / Lower : ϕ20

■Exterior Dimensions (mm)

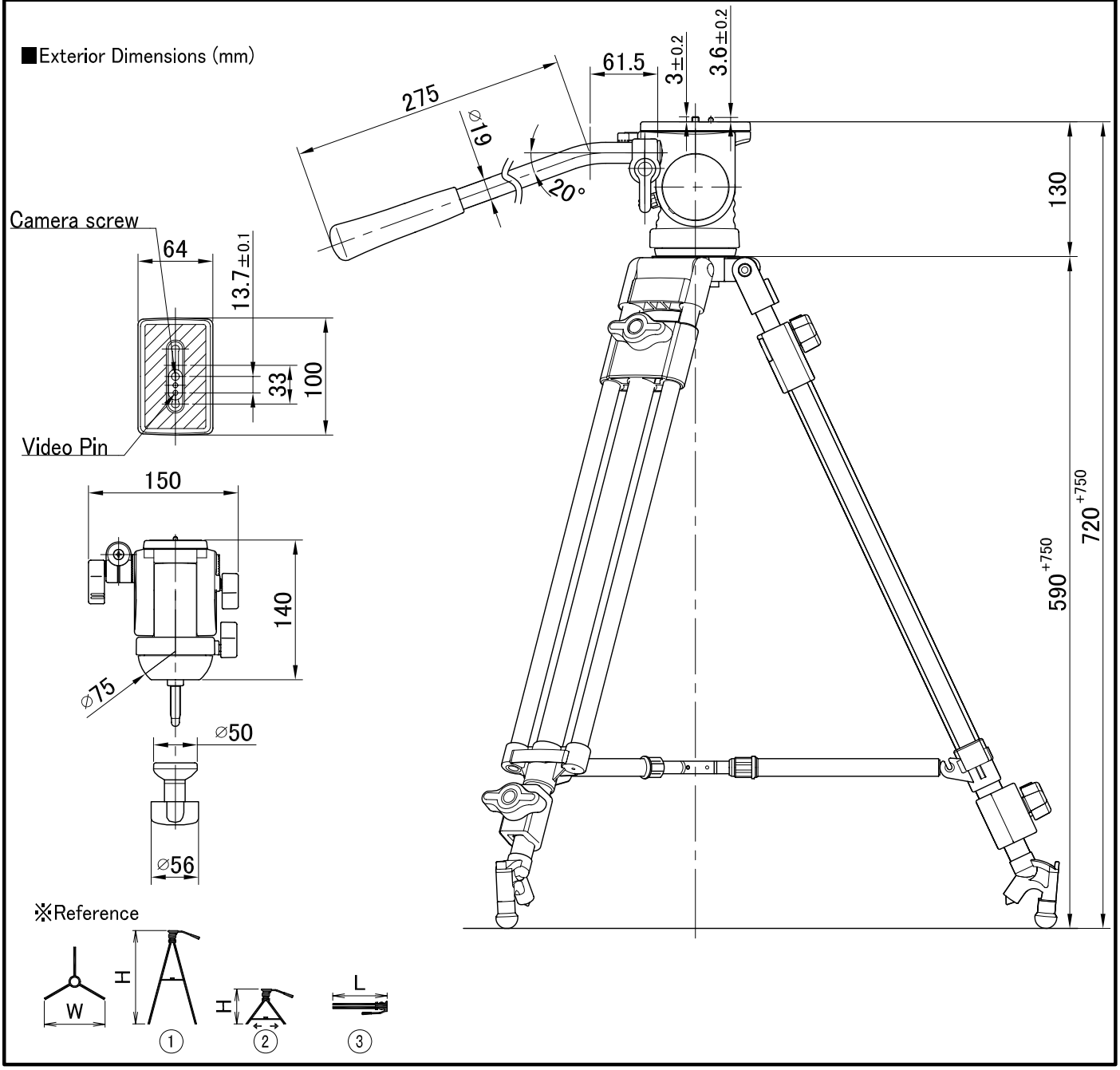

※Reference

Manufacturer : HEIWA SEIKI KOGYO CO., LTD.
978-1, Nishibukuro, Yashio-City, Saitama, 340-0833 Japan TEL . +81-48-995-1301 FAX . +81-48-997-0804 http://www.libec.co.jp