TILTA

# FOR SONY
# A7
# SERIES RIG

## QUICK START

Suitable For
SONY A7S,A7S II,A7R II
Series Cameras

## ES-T17

1.SONY A7 Series cage
2.Mini dovetail plate x 2
(with choices for different cameras)
3.Quick-release top handle
4.Sony A7 Series quick-release baseplate
+Lens convertor ring support
5.Special screw for Metabones EF lens convertor ring
6.Top 15mm rod adaptor
7. MICRO MINI plug protector
8. Standard HDMI plug protector
9. Allen key x 3
10. HDMI Convert cable x 1
11. 15mm x 300mm Rod *2

## ES-T17-A

Optional part

☐ 12. Wooden handle (Right hand side)

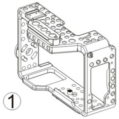

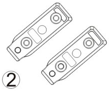

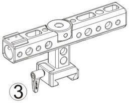

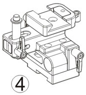

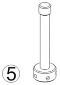

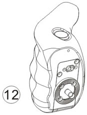

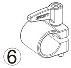

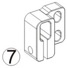

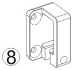

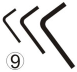

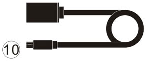

# 1

## How to install the mini base adaptor

Considering the differences of the base connection point and lens center height,
we designed two types of MINI dovetail plate.
Before installing the camera,
please select the suitable plate and install position.
Caution: standard package includes plate for A7S II/A7R II

------------------ Screw hole for mini dovetail plate

———————— Screw hole for camera

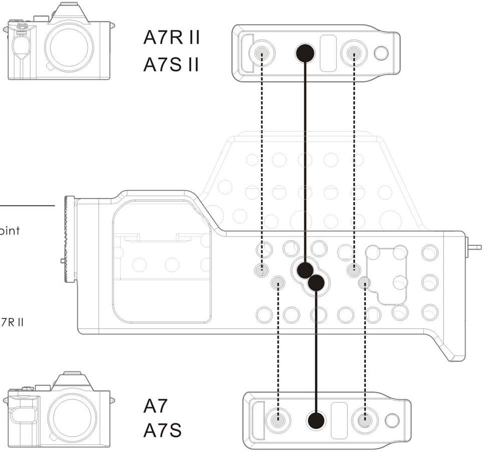
A7R II
A7S II
A7
A7S

# 2

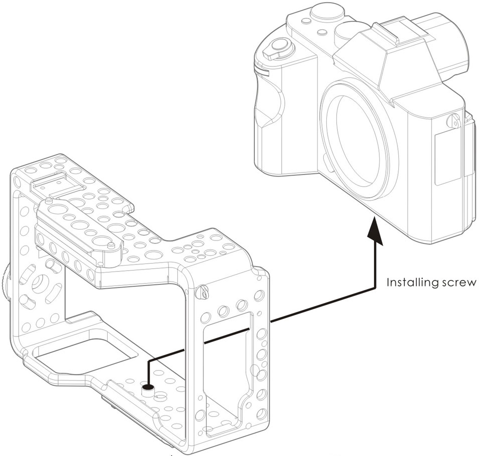
Installing screw hole for A7R II/A7S II

## Install the camera in to the armor then fasten

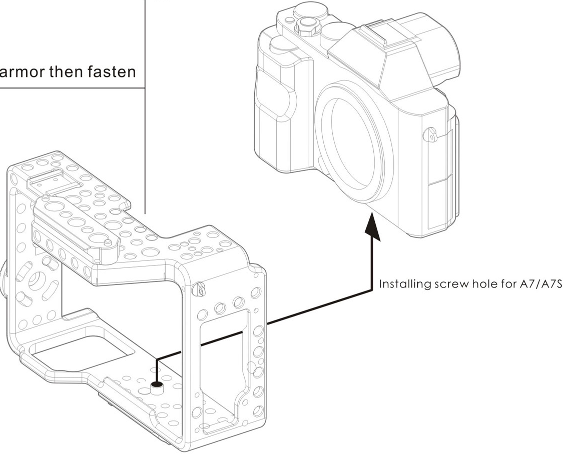
Installing screw hole for A7/A7S

# 3

### ES-T17-A

Optional part

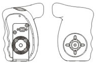

brazil rose wood handle,
human engineering
design for comfortable grip

Internal chip,
can control
ARRI,RED,SONY,BMD and CANON cameras etc.
different cables available.

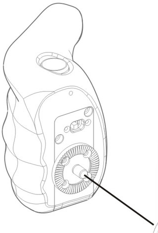

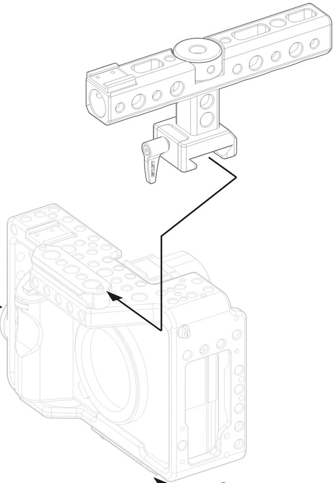

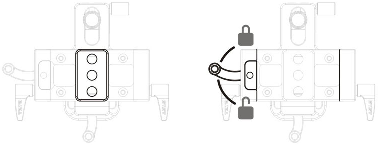

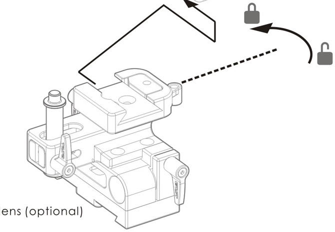

## How to install baseplate

1.Install the baseplate onto the tripod with the three 1/4 screw holes
2.Dovetail design, 10 inch plate can be used for telephoto lens or zoom lens (optional)

# 4

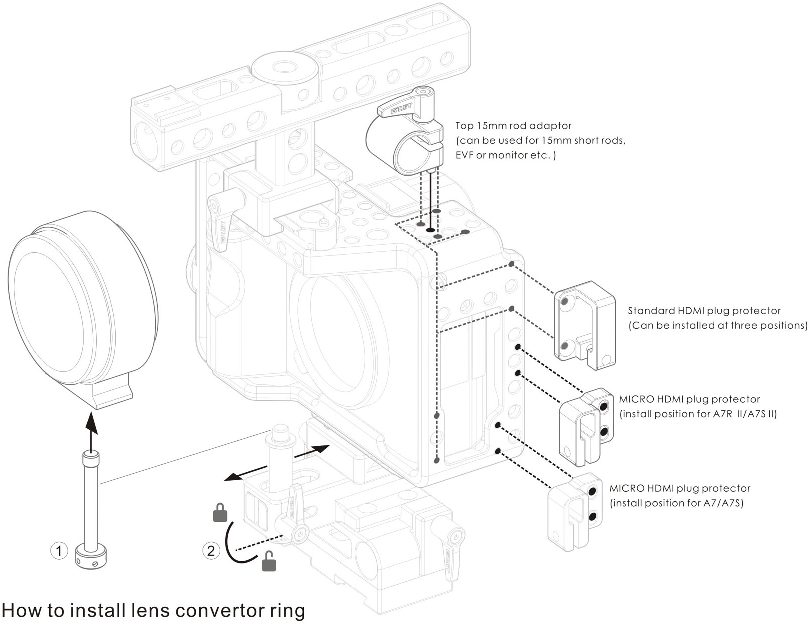
Top 15mm rod adaptor
(can be used for 15mm short rods,
EVF or monitor etc. )
Standard HDMI plug protector
(Can be installed at three positions)
MICRO HDMI plug protector
(install position for A7R II/A7S II)
MICRO HDMI plug protector
(install position for A7/A7S)
①
②

## How to install lens convertor ring

1. longer screws applied when using Metabones EF convertor ring
2. Suitable for most of the EF/PL lens convertor rings, Choose the right fixing position for your lens convertor ring, then fasten

## Optional part

15mm x 100mm Rod R15-100
15mm x 200mm Rod R15-200
15mm x 300mm Rod R15-300

10' Lightweight dovetail plate TT-C16

EVF Holder TT-E01-A
Monitor arm MA-T03

Follow focus with hard stops-15mm FF-T03

4x4 Lightweight matte box MB-T05

Offset shoulder pad TT-0516
Universal handgrip UH-T03

DSLR Power supply system BT-003

## Optional parts for A7 series rigs

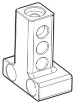

Horizontal installing adaptor for top handle
TT-E04
( may be applied when using SONY XLR K2M microphone and other equipment.)

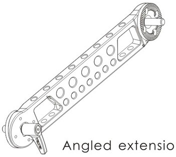

Angled extension arm TT-E03

# TILTA

WWW.TILTA.COM

TILTA TECHNOLOGY CO.,LTD

Add:2nd floor,Building B,Qiaode high technology park,No.7Road,Guangming new dist,Shenzhen 518125

Tel:+86 0755 33185005    Fax:+86 0755 33185003

All copy rights belong to Tilta Technolgy Co. Ltd,
permission is needed for any copy.
Tilta has the right to adjust product specification without notice.
All measurements are for reference only.Please see the actual products for more details.
TILTA and TILTAMAX are registered trade marks own by Tilta Technology Co., Ltd