Overall
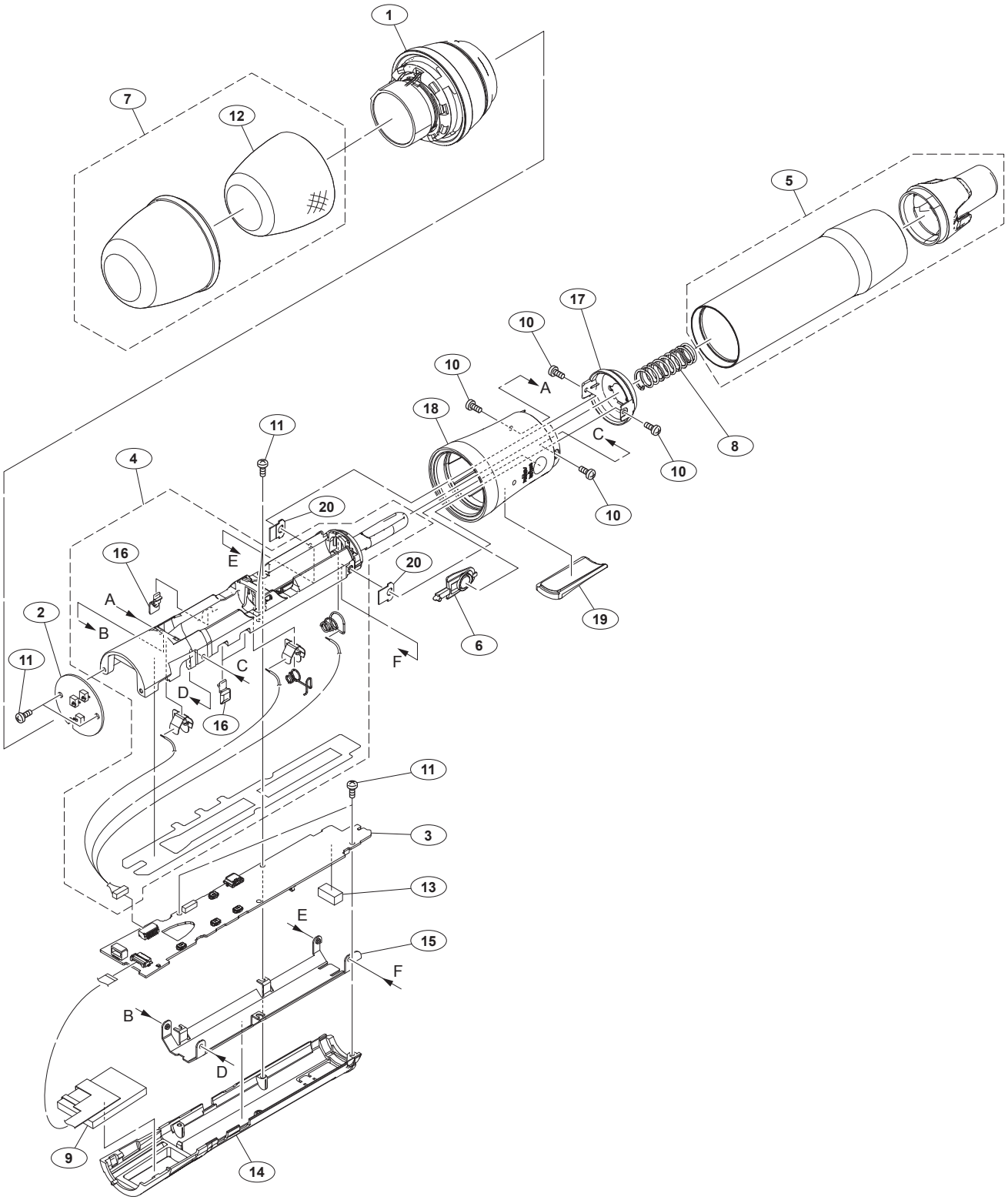
3-2. Exploded Views