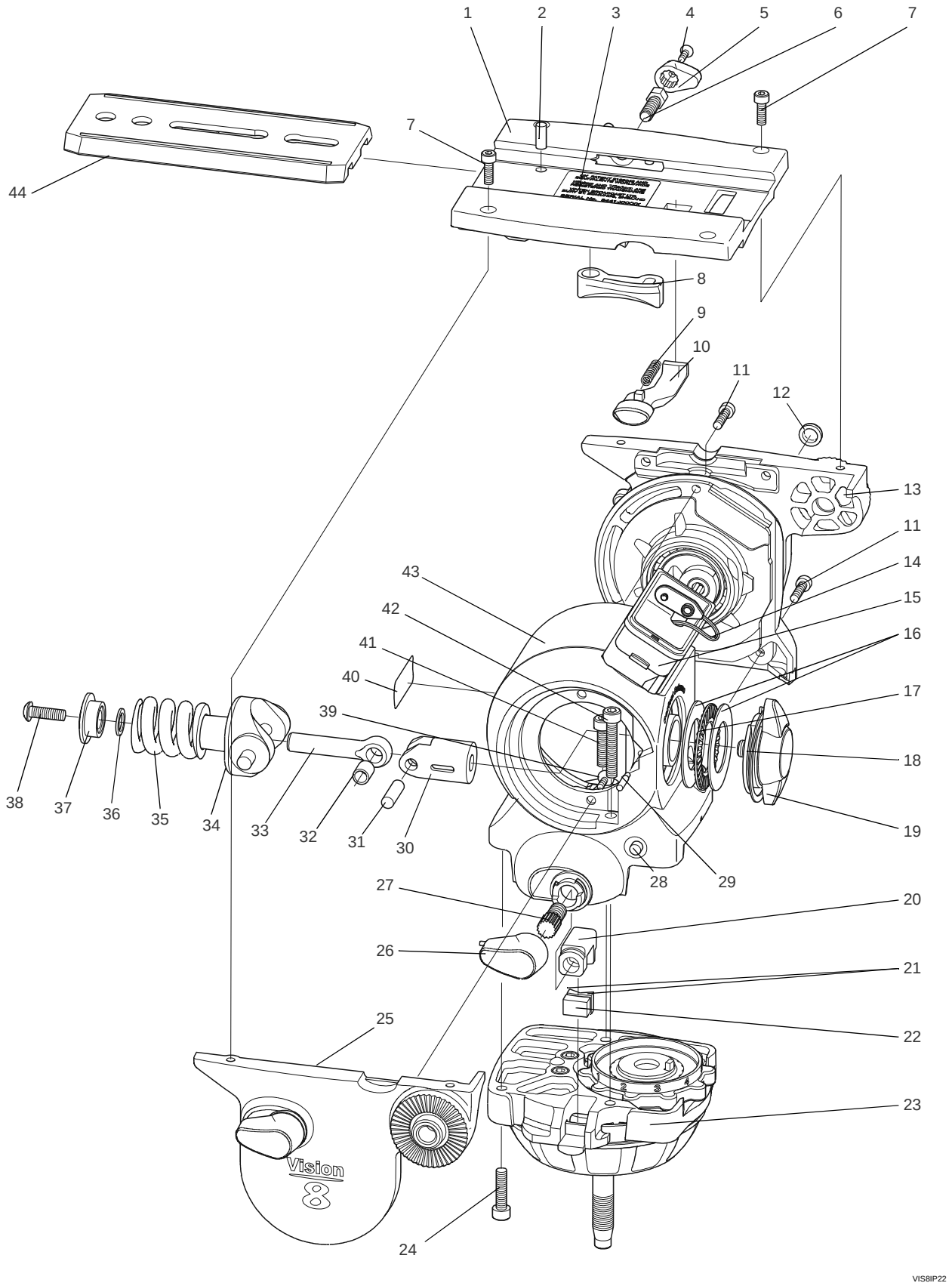

Fig 6.2 Vision 8 (Black) Pan and Tilt Head - Main Unit Assembly